N/G-208

Reservedelsliste
Spare parts list
Ersatzteilliste
Liste de pièces détachees

Turbo Laser / Turbo Laser / Turbo Laser / Turbo Laser 2

Pistol RL24 / Pistol RL24 / Pistole RL24 / Pistolet RL24 5

Pistol ST 1100 / Pistol ST 1100 / Pistole ST 1100 / Pistolet ST 1100 7

Pumpe MK I / Pump MK I / Pumpe / Pomp 9

Motor / Motor / Motor / Moteur 12

Pumpe MK II / Pump MK II / Pumpe / Pomp 15

Printed : 06-10-2003

Turbo Laser / Turbo Laser / Turbo Laser / Turbo Laser

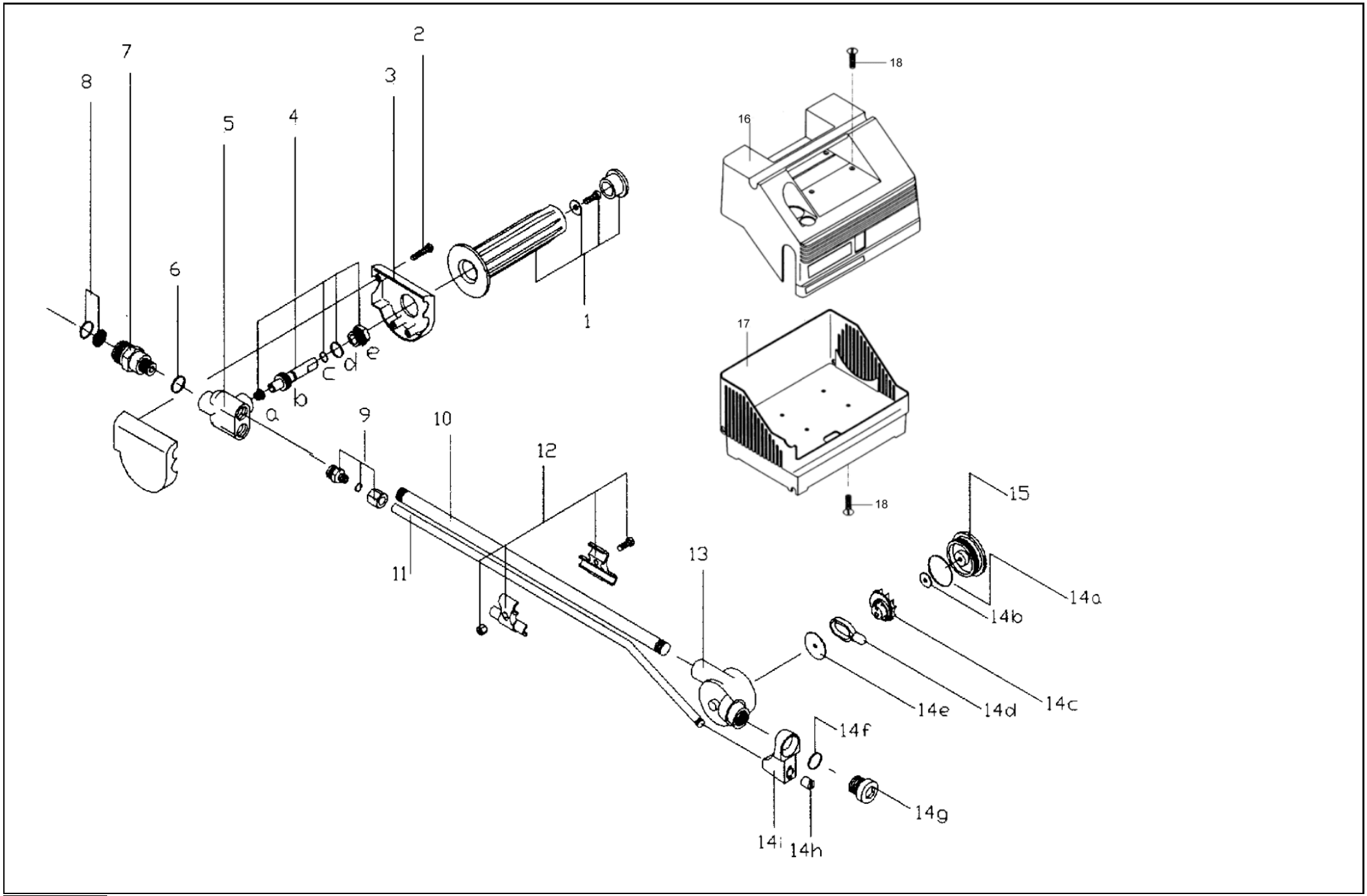

Turbo Laser / Turbo Laser / Turbo Laser / Turbo Laser

Pos.	Ref. no.	Betegnelse Description	Bezeichnung Description	208
0	06301439	TRANSFER "GERNI 208" TRANSFERS “GERNI 208”	KLEBSTREIFEN G-208 AUTOCOLLANT "GERNI 208"	2
0	06301451	TRANSFERS TURBO LASER	KLEBSTREIFEN TURBO LASER AUTOCOLLANT TURBO LASER	1
01	06260232	HÅNDTAGSKIT F.SPULERØR HANDLE KIT	HANDGRIFFKIT F. DOPPELLANZE KIT DE POIGNEE CPL.	1
02	06070479	SKRUE, 4X20 SCREW, 4X20	SCHNEIDSCHRAUBE, SCHWARZZINK VIS, 4X20	3
03	06200097	PYNTEDÆKSEL , PISTOL 5 COVER, PISTOL 5	STAUBKAPPE F. VENTILGEHAEUSE COUVERCLE, PISTOL 5	1
04	06260860	VENTILSPINDEL KIT VALVE SPINDLE KIT	VENTILSPINDELKIT F. DRUCKREGELUNG KIT DE TIGE DE VANNE	1
05	06211078	VENTILHUS VALVE HOUSING	VENTILGEHAEUSE, KPL. CORPS DE VANNE	1
06	06120188	O-RING, 10X2 O-RING, 10X2	O-RING JOINT TORIQUE, 10X2	1
07	06030484	SKRUEKOBLING 1/4 UDV. SCREW COUPLING ROTATABLE , 1/4"	SCHR.KUPPLUNG DREHBAR F.DOPPELLANZE RACCORD A VIS TOURNANT , 1/4"	1
08	06100332	FILTER FOR TURBO LASER FILTER FOR TURBO LASER	FILTER F. TURBO LASER M. O-RING FILTRE P.TURBO LASER	1
08A	06120139	O-RING, 10X1 O-RING, 10X1	O-RING JOINT TORIQUE, 10X1	1
09	06030527	BRYSTNIPPEL, 8X1/4" BREAST NIPPLE, 8X1/4"	GEWINDESTUECK RACCORD A VIS, 8X1/4"	1
1-15	06261361	TURBO LASER, 400 MM1X220-240V/50 HZ TURBO LASER, 400 MM1X220-240V/50 HZ	TURBO LASER MESSING TURBO LASER, 400 MM1X220-240V/50 HZ	1
10	06050952	SPULERØR, Ø13X1,5X367 LANCE, Ø13X1,5X367	LANZE F. TURBO LASER LANCE, Ø13X1,5X367	1
11	06050869	KEMIRØR, Ø8X1X400 DETERGENT PIPE, Ø8X1X400	REINIGUNGSM.ROHR F. PLASTIK TURBO LASER TUYAY DE DETERGENT, Ø8X1X400	1
12	06261130	BESLAG FOR TURBO LASER FITTINGS FOR TURBO LASER	BESCHLAG F. TURBO LASER ROHR ARMATURE P. TURBO LASER	1
13	06261646	HUS FOR TURBO LASER, Ø2,0 HOUSING FOR TURBO LASER, Ø2,0	GEHAUESE F. TURBO LASER CORPS P. TURBO LASER, Ø2,0	1
14	06261376	SERVICEKIT FOR TURBO LASER, 1X220-240V/50 HZ SERVICE KIT FOR TURBO LASER, 1X220-240V/50 HZ	SERVICE KIT F. TURBO LASER KIT DE SERVICE P. TURBO LASER, 1X220-240V/50 HZ	1
15	06180936	LÅG FOR TURBO LASER COVER FOR TURBO LASER	DECKEL F. TURBO LASER, BEARBEITET COUVERCLE P.TURBO LASER	1
16	06240236	KAROSSE GRØN, G208 BODY GREEN, G208	KAROSSERIEOBERTEIL GRUEN CARROSSE VERT, G208	1
16	06240237	KAROSSE GRÅ, N208 BODY GREY, N208	KAROSSERIEOBERTEIL GRAU CARROSSE GRIS, N208	1
17	06240235	KAROSSE, SORT BODY, BLACK	KAROSSERIEUNTERTEIL SCHWARZ CARROSSE, NOIR	1

Pos.	Ref. no.	Betegnelse Description	Bezeichnung Description	208
18	06070749	SKRUE, 6X10 SCREW, 6X10	IMBUSSREITSTOCKSCHRAUBE, GALV. VIS, 6X10	8

Pistol RL24 / Pistol RL24 / Pistole RL24 / Pistolet RL24

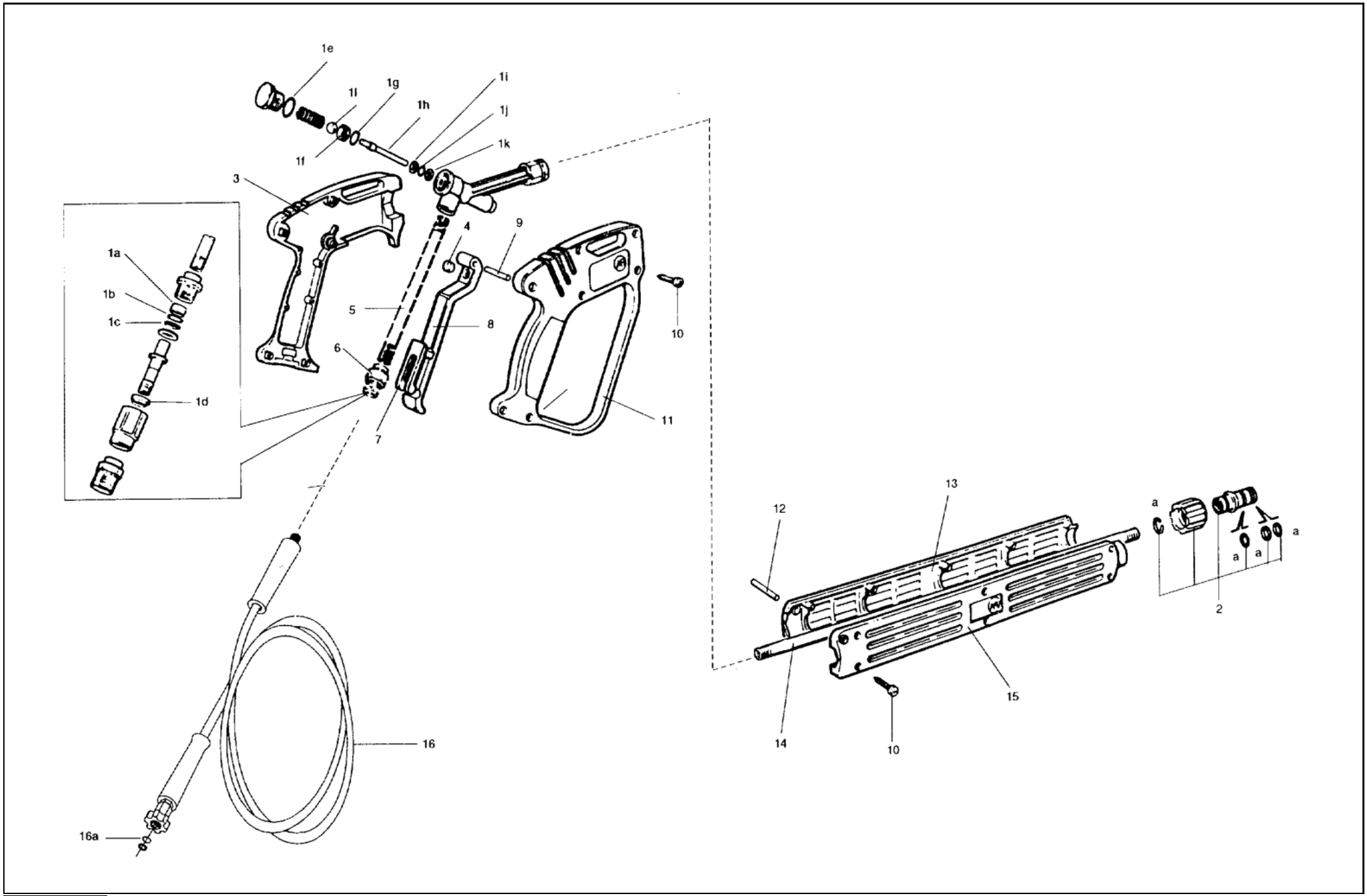

Pistol RL24 / Pistol RL24 / Pistole RL24 / Pistolet RL24

Pos.	Ref. no.	Betegnelse Description	Bezeichnung Description	208
01	06290025	PISTOL RL24	PISTOLE RL24 PISTOLET RL24=290073	1
02	06261567	SKRUEKOBLING	SCHRAUBENKUPPLUNG RACCORD VIS G3000=261568 S	1
02A	06261546	PAKNINGSKIT F.SKRUEKOBL. GASKET KIT FOR SCREW COUPLING	KIT F. O-RING SCHRAUBENKUPPLUNG KIT DE JOINT POUR RACCORD A VIS	1
04	06120513	TRYKBRIK PUSH BROACH	DRUCKUNTERSATZ RONDELLE DE PRESSION	1
05	06050977	TILGANGSRØR INLET PIPE	EINLASSROHR TUYAU D"ENTRE	1
06	06290037	DREJELED SWIVEL	KIT FÜR DREHGELENK RL24 RACCORD TOURNANT	1
07	06200413	SIKKERHEDSLÅS	SICHERHEITSSCHLOSS JOINT D"ARRET DE SURETE	1
08	06200411	AFTRÆKKER PULLER	PISTOL SCHALTHEBEL DETENTE	1
09	06200416	LÅSEPAL LOCKING PAWL	VERSCHLUSS-SPERRKNEBEL CLIQUET D"ARRÊT	1
10	06070835	SKRUE, 3,5X18 SCREW, 3,5X18	SCREW 3,5X18 VIS, 3,5X18	13
12	06200416	LÅSEPAL LOCKING PAWL	VERSCHLUSS-SPERRKNEBEL CLIQUET D"ARRÊT	1
13	06200415	KAPPE CAP	KAPPE FÜR FOHRROHR RECHTS MANTEAU	1
14	06050978	FORRØR FOR PISTOL FRONT PIPE FOR PISTOL	VORDERROHR F. PISTOLE TUBE AVANT P. PISTOLET	1
15	06200414	KAPPE FOR FORRØR VENSTRE	KAPPE FÜR VORRÖHRE LINKS MANTEAU P. TUYAU AVANT GA UCHE	1
16	06110533	HØJTRYKSSLANGE, Ø70 HIGH PRESSURE HOSE, Ø70	HOCHDRUCKSSCHLAUCH TUYAU HAUTE PRESSION, Ø70	1
16A	06120188	O-RING, 10X2 O-RING, 10X2	O-RING JOINT TORIQUE, 10X2	1
1A - L	06261548	SERVICEKIT F.PISTOL RL24 SERVICE KIT FOR PISTOL , RL24	KIT F. PISTOLE RL-24 KIT DE SERVICE P. PISTOLET , RL24	1

Pistol ST 1100 / Pistol ST 1100 / Pistole ST 1100 / Pistolet ST 1100

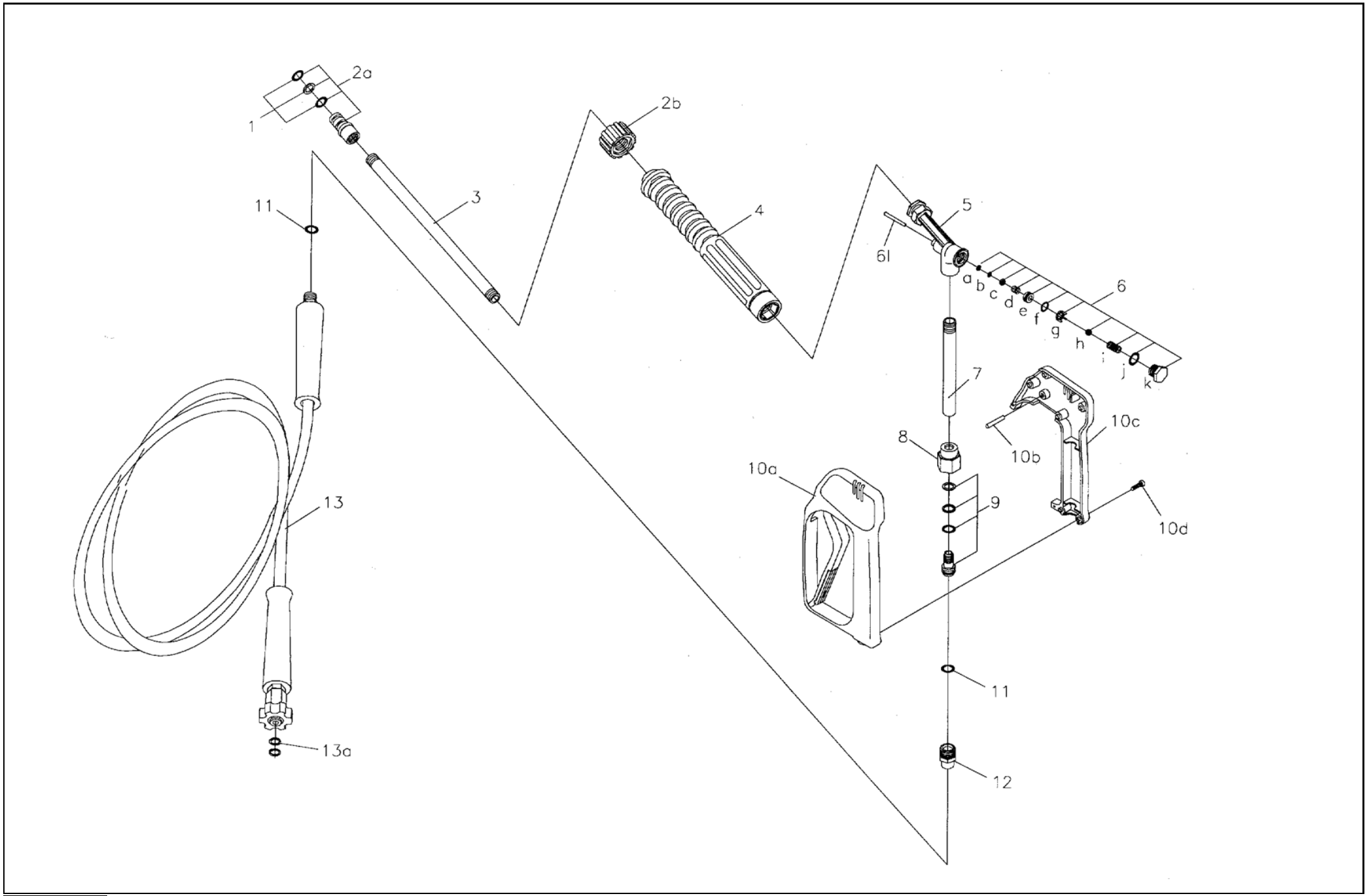

Pistol ST 1100 / Pistol ST 1100 / Pistole ST 1100 / Pistolet ST 1100

Pos.	Ref. no.	Betegnelse Description	Bezeichnung Description	208
0	06290057	PISTOL - ST 1100 - LANG MED SWIVEL, 22 MM KOBLING PISTOL - ST 1100-LONG W. SWIVEL, 22 MM COUP.	PISTOLE PISTOLET-ST 1100-LONG AVEC SWIVEL, RAC. A VIS	1
01	06261547	PAKNINGSKIT F.SKRUEKOBL. GASKET KIT FOR SCREW COUPLING	SCHRAUBKUPPLUNG KIT DE JOINT POUR RACCORD A VIS	1
02	06290062	SKRUEKOBLING SCREW COUPLING	SCHRAUBENKUPPLUNG RACCORD A VIS	1
03	06290066	FORRØR FOR PISTOL FRONT PIPE FOR PISTOL	VORDERROHR F. PISTOLE TUBE AVANT P. PISTOLET	1
04	06290067	KAPPE CAP	ABDECKUNG F. PISTOLE MANTEAU	1
05	06290068	PISTOLKROP PISTOL HOUSING	GEHÄUSE F. PISTOLE CORPS DE PISTOLET	1
07	06290069	TILGANGSRØR INLET PIPE	EINLASSROHR F. PISTOLE TUYAU D"ENTRE	1
08	06290070	DREJELED SWIVEL	DREHGELENK RACCORD TOURNANT	1
09	06290061	PAKNINGSKIT FOR DREJELED GASKET KIT FOR SWIVEL	SERVICEKIT F. DREHGELENK JOINTS TORIQUES P. RACCORD TOURNANT	1
10	06290063	PISTOLHÅNDTAG, KPL. PISTOL HANDLE, CPL.	PISTOLENGEHÄUSE POIGNEE DE PISTOLET, CPL.	1
11	06120385	USITRING, 24X16,7X1,5 USIT RING, 24X16,7X1,5	USITRING JOINT USIT, 24X16,7X1,5	2
12	06030144	BRYSTNIPPEL, 3/8"-1/4" BREAST NIPPLE, 3/8"-1/4"	GEWINDESTUECK RACCORD A VIS, 3/8"-1/4"	1
13	06110533	HØJTRYKSSLANGE, Ø70 HIGH PRESSURE HOSE, Ø70	HOCHDRUCKSSCHLAUCH TUYAU HAUTE PRESSION, Ø70	1
13A	06120188	O-RING, 10X2 O-RING, 10X2	O-RING JOINT TORIQUE, 10X2	1
6A-L	06261926	SERVICEKIT FOR PISTOL SERVICE KIT FOR PISTOL	SERVUCEKIT F. PISTOLE KIT DE SERVICE P. PISTOLET	1

Pumpe MK I / Pump MK I / Pumpe / Pomp

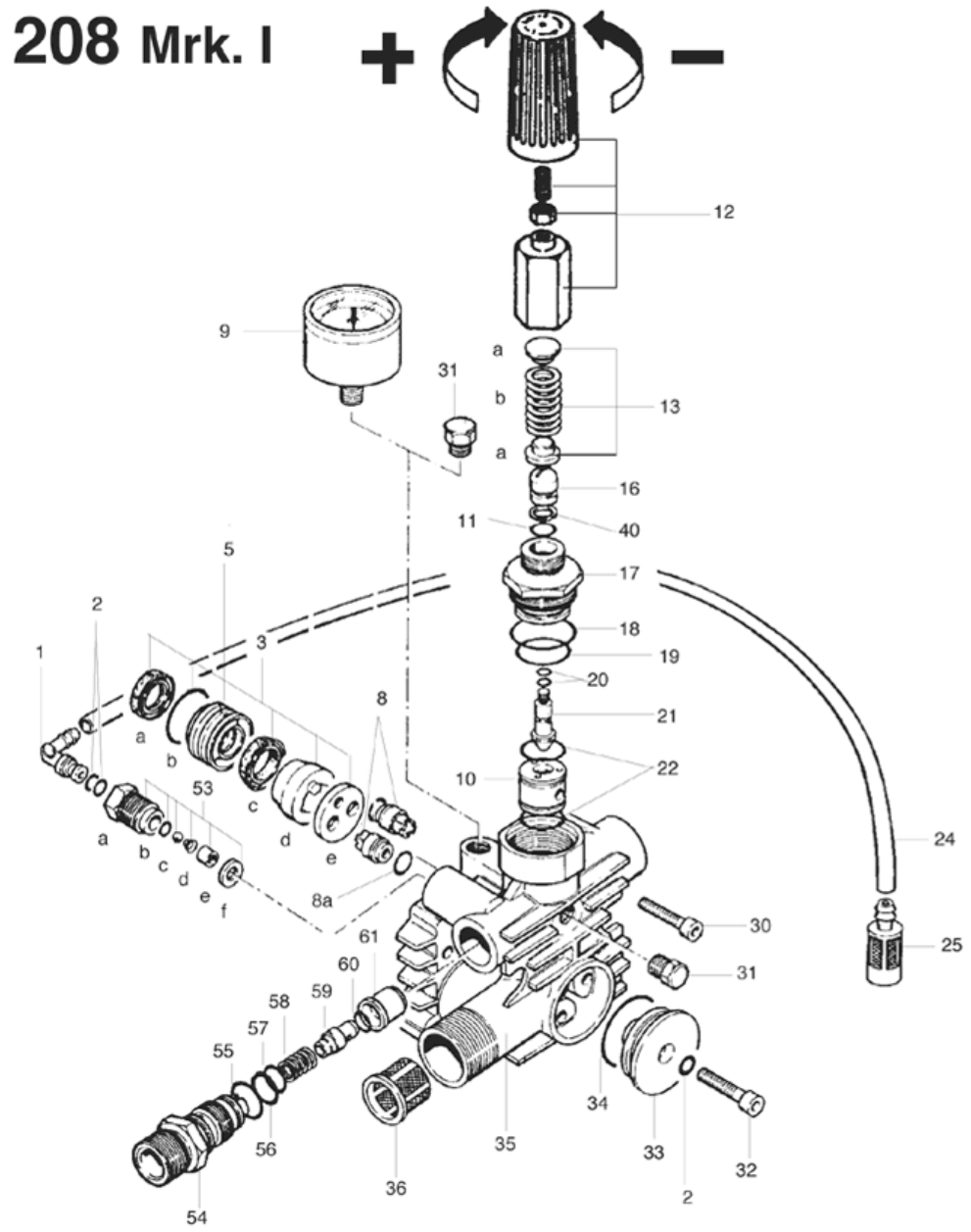

Pumpe MK I / Pump MK I / Pumpe / Pomp

Pos.	Ref. no.	Betegnelse Description	Bezeichnung Description	208
0	06030810	FORSKRUNING FOR OMLØB SCREWED CONNECTION FOR BY-PASS	VERSCHRAUBUNG FÜR BY-PASS RACCORD A VIS POUR BY-PASS	2
0	06051005	RØR FOR OMLØB PIPE FOR BY-PASS	TUYAU POUR BY-PASS	1
0	06261863	OMLØBSVENTILKIT BY-PASS VALVE KIT	UMLAUFVENTILKIT KIT DE VANNE BY-PASS	1
01	06030732	VINKEL FOR KEMISLANGE ANGLE FOR DETERGENT HOSE	SCHLAUCHNIPPEL WINKEL PLASTIK EQUERRE P. TUYAU DE DÉTERGENT	1
02	06120427	O-RING, 4,48X1,78 O-RING, 4,48X1,78	O-RING JOINT TORIQUE, 4,48X1,78	3
03	06261402	VANDMANCHETKIT, 208 WATER CUP KIT, 208	MANSCHETTE KITT KOLBEN KIT POUR COUPELLE D"EAU, 208	1
05	06181114	MANCHETHOLDER CUP HOLDER	MANSCHETTENHALTER KOLBEN SUPPORT DE COUPELLE	3
08	06261403	KIT VENTILER KIT VALVES	KITT F. VENTILE G-208 KIT VANNES	1
08B	06120429	O-RING, 8,73X1,78 O-RING, 8,73X1,78	O-RING JOINT TORIQUE, 8,73X1,78	6
09	06262311	MANOMETER, BAR PRESSURE GAUGE, BAR	MANOMETRE, BAR	1
10	06181115	SÆDE FOR OMLØBSVENTIL, 208 SEAT FOR BY-PASS VALVE, 208	SITZ F. UMLAUFVENTIL G-208 SIÉGE POUR VANNE BY-PASS, 208	1
11	06120430	O-RING, 7,66X1,78 O-RING, 7,66X1,78	O-RING JOINT TORIQUE, 7,66X1,78	1
12	06200330	REGULERINGSHÅNDTAG REGULATING HANDLE	REGULIERHANDGRIFF POIGNÉE DE REGLAGE	1
12	06261706	REGULERINGSHÅNDTAG, KPL. REGULATING HANDLE, CPL.	REGELHANDGRIFF MRKI POIGNÉE DE REGLAGE, CPL.	1
13	06261513	FJEDERSTYRKIT SPRING GUIDE KIT	FEDER MIT FUEHRUNG F. UMLAUFVENTIL KIT DE GUIDE DE RESSORT	1
13A	06280149	FJEDER SPRING	FEDER - SIEHE 261513 RESSORT	1
16	06181118	STEMPEL FOR OMLØBSVENTIL PISTON FOR BY-PASS VALVE	KOLBEN F. UMLAUF PISTON P. VANNE BY-PASS	1
17	06181119	TOPDÆKSEL , 208 TOP COVER , 208	PFROPFEN F. UMLAUF COUVERCLE SUPERIEURE , 208	1
18	06120431	O-RING, 26,70X1,178 O-RING, 26,70X1,178	O-RING JOINT TORIQUE, 26,70X1,178	1
19	06120432	O-RING, 21,98X1,78 O-RING, 21,98X1,78	O-RING JOINT TORIQUE, 21,98X1,78	1
20	06120433	O-RING, 2,9X1,78 O-RING, 2,9X1,78	O-RING JOINT TORIQUE, 2,9X1,78	2
21	06181120	KEGLE FOR OMLØBSVENTIL, G208 CONE FOR BY-PASS VALVE, G208	KEGEL F. UMLAUFVENTIL G-208 CÈNE P. VANNE BY-PASS, G208	1

Pumpe MK I / Pump MK I / Pumpe / Pomp

Pos.	Ref. no.	Betegnelse Description	Bezeichnung Description	208
22	06120434	O-RING, 17,17X1,78 O-RING, 17,17X1,78	O-RING JOINT TORIQUE, 17,17X1,78	2
24	06110514	KEMISLANGE DETERGENT HOSE	REINIGUNGSMITTELSCHLAUCH TUYAU DE DETERGENT	1
25	06100348	KEMIFILTER, G208 DETERGENT FILTER, G208	REINIGUNGSMITTELFILTER KPL. G-208 FILTRE DE DETERGENT , G208	1
30	06070800	UNBRACO SKRUE, M6X30 ALLEN SCREW, M6X30	IMBUSS 8,8 GALV VIS A TETE CYLINDRIQUE, M6X30	4
31	06030733	BLÆNDPROP, 1/8" HOLE PLUG, 1/8"	BLIENDPFROPFEN CACHE-PRISE, 1/8"	1
32	06070789	UNBRACO SKRUE, M6X20 ALLEN SCREW, M6X20	IMBUSS-SCHRAUBE VIS A TETE CYLINDRIQUE, M6X20	1
33	06181121	BLÆNDPROP, G208 HOLE PLUG, G208	PFROPFEN F. PUMPENGEHAUESE CACHE-PRISE, G208	1
34	06120435	O-RING, 28,25X1,78 O-RING, 28,25X1,78	O-RING JOINT TORIQUE, 28,25X1,78	1
35	06181122	PUMPEHUS PUMP HOUSING	PUMPENGEHAEUSE G-208 CORPS DE POMPE	1
36	06100368	FILTER FILTER	WASSERFILTER FILTRE	1
40	06181184	STØTTERING BACK-UP RING	STUETZRING ANNEAU D"ETAIEMENT	1
53	06261404	KONTRAVENTILKIT FOR KEMI NON-RETURN VALVE KIT FOR DETERGENT	KITT F. RUECKSCHLAGVENTIL REI. MIT. KIT DE VANNE ANTIRETOUR	1
53B	06120427	O-RING, 4,48X1,78 O-RING, 4,48X1,78	O-RING JOINT TORIQUE, 4,48X1,78	1
54	06181123	AFGANGSNIPPEL/INJEKTORDYSE OUTLET NIPPLE/INJECTOR NOZZLE	AUSLASSNIPPEL G-208 RACCORD DE DEPART/GICLEUR D"INJECTEUR	1
55	06120436	O-RING, 15,60X1,78 O-RING, 15,60X1,78	O-RING JOINT TORIQUE, 15,60X1,78	1
56	06120437	O-RING, 12,42X1,78 O-RING, 12,42X1,78	O-RING JOINT TORIQUE, 12,42X1,78	1
57	06120438	O-RING, 7,66X1,78 O-RING, 7,66X1,78	O-RING JOINT TORIQUE, 7,66X1,78	1
58	06280176	FJEDER SPRING	FEDER MRK. I RESSORT	1
59	06190457	KEGLE FOR KONTRAVENTIL, G208 CONE FOR NON-RETURN VALVE, G208	KEGEL RUECKSCHLAGVENTIL CÈNE P. VANNE ANTIRETOUR, G208	1
60	06120439	O-RING, 5,60X2,2 O-RING, 5,60X2,2	O-RING JOINT TORIQUE, 5,60X2,2	1
61	06181124	SÆDE FOR KEGLE SEAT FOR CONE	SITZ F. RUECKSCHLAGVENTIL SIÉGE P. CÈNE	1
65	06070769	JUSTERSKRUE, M6X16 ADJUSTING SCREW, M6X16	VIS DE REGLAGE, M6X16	1

Motor / Motor / Motor / Moteur

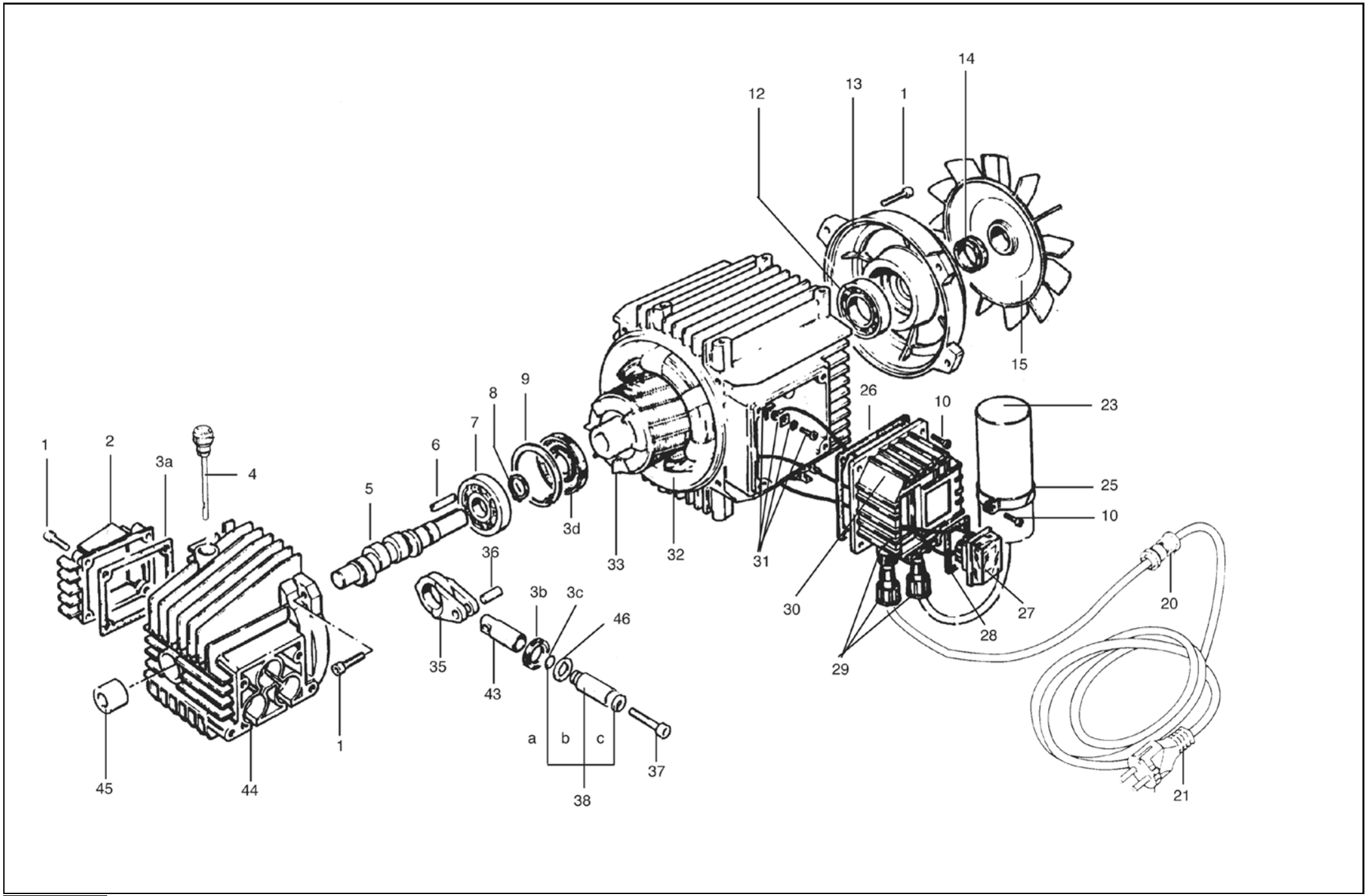

Motor / Motor / Motor / Moteur

Pos.	Ref. no.	Betegnelse Description	Bezeichnung Description	208
01	06070786	SKRUE, M5X25 SCREW, M5X25	IMBUSS-SCHRAUBEN VIS, M5X25	12
02	06181110	DÆKSEL FOR KRUMTAPHUS, G208 COVER FOR CRANKCASE, G208	DECKEL F. KURBELGEHAEUSE COUVERCLE P. CORPS DE MANIVELLE, G208	1
04	06200329	OLIEPIND, G208 OIL TAP, G208	OELMESSSTAB JAUGE D"HUILE, G208	1
05	06181146	KRUMTAP CRANK	KURBEL G-208 MANIVELLE	1
06	06280147	NOT KEY	FEDERKEIL LANGUETTE	1
07	06140052	KRUMTAPLEJE CRANK BEARING	KURBELWELLENLAGER, GROSS G-208 BUTEE DE MANIVELLE	1
08	06120424	LÅSERING FOR KRUMTAPLEJE SNAP RING FOR CRANK BEARING	SCHLIESSRING F. KURBELWELLENLAGER, KLEIN JOINT D"ARRET P. BUTEE DE MANIVELLE	1
09	06120425	LÅSERING FOR KRUMTAPLEJE SNAP RING FOR CRANK BEARING	SCHLIESSRING F. KURBELWELLENLAGER, GROSS JOINT D"ARRET P. BUTEE DE MANIVELLE	1
10	06070787	UNBRACO SKRUE, M3,9X16 ALLEN SCREW, M3,9X16	IMBUSS-BOLZEN VIS A TETE CYLINDRIQUE, M3,9X16	6
12	06140053	KUGLELEJE FOR OLIEFYR BALL BEARING FOR OIL BURNER	KUGELLAGER F. ROTOR G-208 ROULEMENT A BILLES P. BRULEUR	1
13	06270241	ENDEDÆKSEL FOR MOTOR, G 208 END COVER FOR MOTOR, G 208	VENTILATORDECKEL COUVERCLE D"EXTREMITE P. MOTOR, G 208	1
14	06080216	PASRING FOR BLÆSERHJUL GAUGE RING FOR IMPELLER	PASSRING F. GEBLAESERAD ANNEAU P. ROUE SOUFFLANTE	1
15	06270242	BLÆSERHJUL IMPELLER WHEEL	VENTILATORFLUEGEL ROUE DE SOUFFLANTE	1
20	06160892	KABELGENNEMFØRING CABLE GROMMET	KABELDURCHFUEHRUNG KAROSSERIE TRAVERSEE DE CABLE	1
21	06160647	ELKABEL INCL. STIK , 240V/50HZ *AUS*NZ ELECTRIC CABLE INCL. PLUG, 240V/50HZ *AUS*NZ	ELEKTROSTECKER M/LEITUNG - AUSTRALIEN CABLE ELEC. PRISE INCLUSE , 240V/50HZ *AUS*NZ	1
21	06160661	ELKABEL INCL. STIK , 240V/50HZ *GB ELECTRIC CABLE INCL. PLUG, 240V/50HZ *GB	ELEKTRO-STECKER JET UK 313 CABLE ELEC. PRISE INCLUSE , 240V/50HZ *GB	1
21	06160662	ELKABEL INCL. STIK , 230V/50HZ ELECTRIC CABLE INCL. PLUG, 230V/50HZ	ELEKTRO-STECKER M. GUMMIKABEL *N*S*SF CABLE ELEC. PRISE INCLUSE , 230V/50HZ	1
21	06160687	TILGANGSKABEL M/STIK, *DK	ELEKTRO-STECKER GEGOSSEN *DK PRISE ELECTRIQUE CONFECTI ONNE *DK	1
21	06160735	ELKABEL INCL. STIK , 115V/60 HZ0 * US ELECTRIC CABLE INCL. PLUG, 115V/60 HZ0 * US	ELEKTROSTECKER MIT KABEL CABLE ELEC. PRISE INCLUSE , 115V/60 HZ0 * US	1
23	06270260	KONDENSATOR, 45 ÅF CAPASITOR, 45 µF	KONDENSATOR G-208 CONDENSATEUR, 45 ÅF	1
25	06110513	BESLAG FOR KONDENSATOR FITTINGS FOR CAPACITOR	BESCHLAG F. KONDENSATOR ARMATURE P. CONDENSATEUR	1
26	06120426	PAKNING FOR EL-BOX GASKET FOR ELECTRIC BOX	DICHTUNG F. ELEKTRO-SCHALTKASTEN JOINT P. BOITE ELECTRIQUE	1

Motor / Motor / Motor / Moteur

Pos.	Ref. no.	Betegnelse Description	Bezeichnung Description	208
27	06160901	AFBRYDER INCL. PLASTHÆTTE SWITCH INC. PLASTIC CAP	ABSCHALTER G-208 INTERRUPTEUR CAPUCHON INCLUS	1
28	06120444	PAKNING FOR AFBRYDER, G208 GASKET FOR SWITCH, G208	DICHTUNG F. ABSCHALTER G-208 JOINT P. INTERRUPTEUR, G208	1
29	06160893	KABELGENNEMFØRING EL-BOX	KABELDURCHFUEHRUNG ELEKTRO-SCHALTKASTEN TRAVERSEE DE CABLE BOITE ELEC. G-208	2
30	06200345	LÅG FOR EL-BOX, G208 COVER FOR ELECTRIC BOX, G208	DECKEL F. ELEKTRO-SCHALTKASTEN COUVERCLE P. BOITE ELECTRIQUE, G208	1
31	06261400	KIT F. LEDNINGSMONTERING	KIT. F. KABELMONTIERUNG KIT MONTAGE DE CABLE G-20 8	1
32	06270261	STATOR INCL. STATORHUS, 230/240V STATOR INCL. STATOR SHELL, 230/240V	STATORGEHAUESE M/ROTOR 230/240 STATOR, CORPS DE STATOR INCLUS, 230/240V	1
35	06181111	OVERGANGSSTYKKE FOR STEMPEL TRANSFER DEVICE FOR PISTON	PLEUELSTANGE PIECE INTERMEDIAIRE P. PISTON	3
36	06280148	LÅSESPLIT LOCKING PIN	SPLINT F. PLEUELSTANGE JOINT D"ARRET	3
37	06070485	UNBRACO SKRUE, M6X40 ALLEN SCREW, M6X40	IMBUSSCHRAUBE ROSTFREI, Z/K VIS A TETE CYLINDRIQUE, M6X40	3
38	06261401	STEMPELKIT, MRK. I 1 STK. PISTON KIT, MRK. I 1 PCS.	KITT F. KOLBEN G-208 KIT DE PISTON, MRK. I 1 PCS.	1
3A-3D	06261399	OLIETÆTNINGSKIT FOR KRUMTAPHUS, G208 OIL SEALING KIT FOR CRANKCASE, G208	KITT F. OELDICHTUNG KUERBELGEHAEUSE KIT D"OBTURATION P. CORPS DE MANIVELLE, G208	1
43	06181112	BØSNING FOR STEMPEL BUSHING FOR PISTON	KOLBENFUSS DOUILLE P. PISTON	3
44	06181113	KRUMTAPHUS CRANKCASE HOUSING	KURBELGEHAEUSE G-208 CORPS DE MANIVELLE	1
45	06140054	LEJE FOR KRUMTAP BEARING FOR CRANKCASE	KURBELWELLENLAGER, KLEIN G-208 BUTEE P. MANIVELLE	1
46	06120510	SKIVE WASHER	SCHEIBE RONDELLE	3

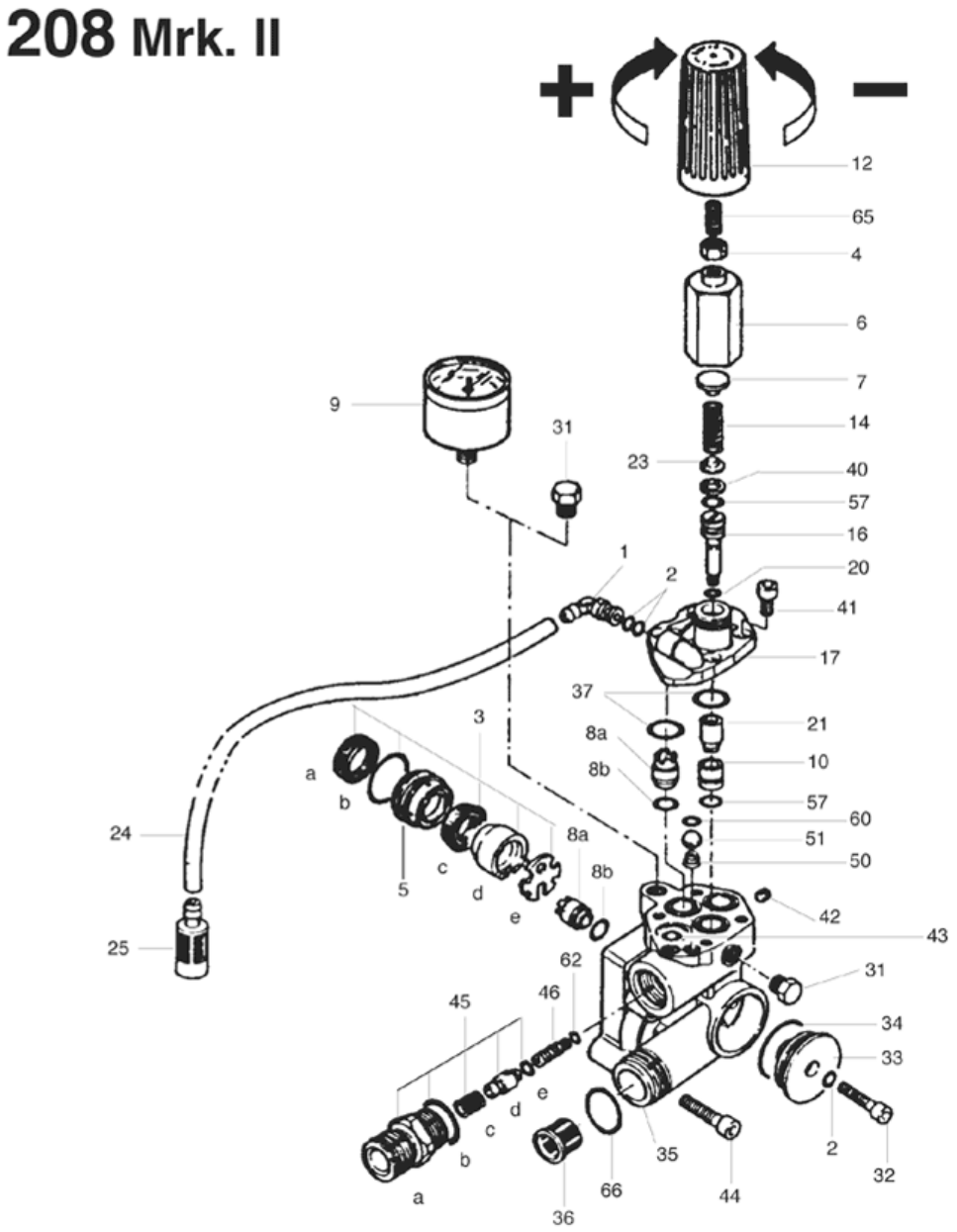
208 Mrk. II
+
−
12
65
4
6
7
14
23
40
57
16
20
41
17
9
31
1
2
37
21
8a
10
8b
57
60
51
50
3
a
b
24
8a
c
8b
5
d
e
42
43
25
62
31
45
46
34
33
e
d
c
b
a
35
2
32
66
44
36

Pumpe MK II / Pump MK II / Pumpe / Pomp

Pos.	Ref. no.	Betegnelse Description	Bezeichnung Description	208
0	06030810	FORSKRUNING FOR OMLØB SCREWED CONNECTION FOR BY-PASS	VERSCHRAUBUNG FÜR BY-PASS RACCORD A VIS POUR BY-PASS	2
0	06051005	RØR FOR OMLØB PIPE FOR BY-PASS	TUYAU POUR BY-PASS	1
0	06261864	OMLØBSVENTILKIT BY-PASS VALVE KIT	UMLAUFVENTILKIT KIT DE VANNE BY-PASS	1
01	06030732	VINKEL FOR KEMISLANGE ANGLE FOR DETERGENT HOSE	SCHLAUCHNIPPEL WINKEL PLASTIK EQUERRE P. TUYAU DE DÉTERGENT	1
02	06120427	O-RING, 4,48X1,78 O-RING, 4,48X1,78	O-RING JOINT TORIQUE, 4,48X1,78	3
03	06261514	VANDMANCHETKIT WATER CUP KIT	WASSERMANSCHETTEKIT KIT POUR COUPELLE D"EAU	1
04	06080228	MØTRIK NUT	MUTTER FÜR REGELUNGSEINHEIT ECROU	1
05	06181193	MANCHETHOLDER CUP HOLDER	MANSCHETTEHALTER SUPPORT DE COUPELLE	3
06	06181286	HUS FOR REGULERINGSENHED HOUSING FOR REGULATING UNIT	GEHAUESE F. REGULIEREINHEIT CORPS P. UNITE DE REGLAGE	1
07	06200390	FJEDERSTYR SPRING GUIDE	FEDERFUEHRUNG TOP GUIDE DE RESSORT	1
08	06261403	KIT VENTILER KIT VALVES	KITT F. VENTILE G-208 KIT VANNES	1
08B	06120429	O-RING, 8,73X1,78 O-RING, 8,73X1,78	O-RING JOINT TORIQUE, 8,73X1,78	6
09	06262311	MANOMETER, BAR PRESSURE GAUGE, BAR	MANOMETRE, BAR	1
10	06181187	SÆDE FOR OMLØBSVENTIL SEAT FOR BY-PASS VALVE	SITZ F. UMLAUFVENTIL SIÉGE POUR VANNE BY-PASS	1
12	06200330	REGULERINGSHÅNDTAG REGULATING HANDLE	REGULIERHANDGRIFF POIGNÉE DE REGLAGE	1
14	06280158	FJEDER SPRING	FEDER RESSORT	1
16	06181185	SKRUE SCREW	KOLBEN F. UMLAUFVENTIL VIS	1
17	06262142	TOPDÆKSEL TOP COVER	COUVERCLE SUPÚRIEURE	1
20	06120433	O-RING, 2,9X1,78 O-RING, 2,9X1,78	O-RING JOINT TORIQUE, 2,9X1,78	1
21	06181195	KEGLE FOR OMLØBSVENTIL CONE FOR BY-PASS VALVE	KEGEL F. UMLAUFVENTIL CÈNE P. VANNE BY-PASS	1
23	06200391	FJEDERSTYR SPRING GUIDE	FEDERFUEHRUNG BODEN GUIDE DE RESSORT	1
24	06110514	KEMISLANGE DETERGENT HOSE	REINIGUNGSMITTELSCHLAUCH TUYAU DE DETERGENT	1

Pumpe MK II / Pump MK II / Pumpe / Pomp

Pos.	Ref. no.	Betegnelse Description	Bezeichnung Description	208
25	06100348	KEMIFILTER, G208 DETERGENT FILTER, G208	REINIGUNGSMITTELFILTER KPL. G-208 FILTRE DE DETERGENT , G208	1
31	06030733	BLÆNDPROP, 1/8" HOLE PLUG, 1/8"	BLIENDPFROPFEN CACHE-PRISE, 1/8"	2
32	06070813	UNBRACO SKRUE, M6X20 ALLEN SCREW, M6X20	IMBUSSBOLZEN VIS A TETE CYLINDRIQUE, M6X20	1
33	06181121	BLÆNDPROP, G208 HOLE PLUG, G208	PFROPFEN F. PUMPENGEHAUESE CACHE-PRISE, G208	1
34	06120435	O-RING, 28,25X1,78 O-RING, 28,25X1,78	O-RING JOINT TORIQUE, 28,25X1,78	1
35	06181188	PUMPEHUS PUMP HOUSING	PUMPENGEHAUESE CORPS DE POMPE	1
35	06181355	PUMPEHUS FOR OMLØB PUMP HOUSING FOR BY-PASS	PUMPEGEHÄUSE F UMLAUF CORPS DE POMPE POUR BY-PASS	1
36	06100368	FILTER FILTER	WASSERFILTER FILTRE	1
37	06120472	O-RING, Ø14X1,780 O-RING, Ø14X1,780	O-RING JOINT TORIQUE, Ø14X1,780	4
40	06181184	STØTTERING BACK-UP RING	STUETZRING ANNEAU D"ETAIEMENT	1
41	06070812	SKRUE, 6X16 SCREW, 6X16	SKRUE VIS, 6X16	4
42	06030749	RØRPROP, 5X45 PLUG FOR PIPE, 5X45	ROHRPFROPFEN BOUCHON DE TUBE, 5X45	2
43	06120470	O-RING, 5X2 O-RING, 5X2	O-RING JOINT TORIQUE, 5X2	1
44	06070814	UNBRACO SKRUE, M6X45 ALLEN SCREW, M6X45	INBUSS-BOLZEN VIS A TETE CYLINDRIQUE, M6X45	4
45	06261631	KONTRAVENTILKIT FOR AFGANGSSTUDS, G208 NON RETURN VALVE KIT FOR OUTLET NIPPLE, G208	KIT F.BYPASS/RÜCKSCHLAGV. CONE DE"ANTIREROUR P. RACCORD DE DEPART,	1
45A	06181189	AFGANGSNIPPEL OUTLET NIPPLE	AUSLASSNIPPEL RACCORD DE DEPART	1
45B	06120434	O-RING, 17,17X1,78 O-RING, 17,17X1,78	O-RING JOINT TORIQUE, 17,17X1,78	1
45C	06280150	FJEDER SPRING	KOLBEN F. RUECKSCHLAGVENTIL RESSORT	1
45D	06181293	KONTRAVENTIL, Ø10X20,6 NON-RETURN VALVE, Ø10X20,6	RUECKSCHLAGVENTIL VANNE ANTI-RETOUR, Ø10X20,6	1
45E	06120504	O-RING, 5,30X2,40 N90 O-RING, 5,30X2,40 N90	O-RING JOINT TORIQUE, 5,30X2,40 N90	1
46	06181190	INJECTORDYSE INJECTOR NOZZLE	INJEKTORDUESE GICLEUR D"INJECTOR	1
50	06280160	FJEDER SPRING	FEDER RESSORT	1

Pumpe MK II / Pump MK II / Pumpe / Pomp

Pos.	Ref. no.	Betegnelse Description	Bezeichnung Description	208
51	06280159	KUGLE BALL	KUGEL BILLE	1
57	06120438	O-RING, 7,66X1,78 O-RING, 7,66X1,78	O-RING JOINT TORIQUE, 7,66X1,78	2
60	06120469	O-RING, 4X2,5 O-RING, 4X2,5	O-RING JOINT TORIQUE, 4X2,5	1
62	06120471	O-RING, 4X2,5 O-RING, 4X2,5	O-RING JOINT TORIQUE, 4X2,5	1
65	06070769	JUSTERSKRUE, M6X16 ADJUSTING SCREW, M6X16	VIS DE REGLAGE, M6X16	1